1

FLASHING LIGHT
CROSSING SIGNALS

SECTION 1

Flashing Light Crossing Signals

CONTENTS

	Page No.
General Information	1-3 to 1-5
Flashing Light Highway Crossing Signal Complete	1-6 to 1-9
Flashing Light Highway Crossing Signal Parts	
Anchor Bolts, Masts, Pinnacles, Pole Steps	1-10 & 1-11
Bases	1-12 & 1-13
Roundels	1-14
Light Units, Type 970	1-15 to 1-19
Signs	1-20 to 1-25
Marker Lights	1-26
Supporting Brackets	1-27
NO TURN Signals	1-28 & 1-29
Light Units, Type 950 (Replacement Parts only)	1-30 to 1-33

WESTERN RAILROAD SUPPLY COMPANY

DIVISION OF WESTERN INDUSTRIES, INC.

MANUFACTURERS & DISTRIBUTORS

GENERAL OFFICES and FACTORY

2742 WEST 36TH PLACE CHICAGO, ILL. 60632

2M/1967

PRINTED IN U.S.A.

Type A-479-A
Flashing Light Highway Crossing Signal with Type 970-201 Light Units

ALL ALUMINUM

GENERAL INFORMATION

The Flashing Light Highway Crossing Signals manufactured by Western Railroad Supply Company represent the latest improvements in design. They meet all A.A.R. Specifications.

This catalog illustrates the most popular arrangements of flashing light signals and accessories, such as junction box-crossarm with two or four flashing light units for one-way or two-way indication. Other arrangements can be furnished to meet particular requirements.

Type 970-201 Crossing Signal Light unit housing is constructed of aluminum and has an efficient 8″ diameter parabolic reflector. The lamp receptacle is supported by a cast metal bracket, positioned to insure exact focusing of lamp filament to reflector. The filament is also in alignment with the side light openings which are fitted with clear glass discs, unless otherwise specified.

The Type 970-201 Crossing Signal differs from previous designs in that it includes an integral hub at the top threaded for 1¼″ pipe fitting. It can readily be attached to the usual junction box-crossarms by using adapter elbows with:

a — threaded fitting on one end and clamp fitting on the other, or
b — threaded fitting on both ends.

The Type 970-201 Crossing Signal Light unit is completely interchangeable with the previous design, Type 950A-201, by use of a proper elbow, as illustrated in this catalog section.

The Type 970-201 Crossing Signal Light unit is lighter in weight (9 pounds) than previous design. A Two-conductor cord is wired to the lamp unit and is long enough for attachment to terminals in the junction box of the crossarm.

The 970 types of junction box-crossarms are constructed of cast aluminum with two three-unit terminal strips; 12 binding posts. Each light unit is attached to a suspension bracket which provides for adjustment of the light beam alignment. Adjustment can be made of each light unit independently of the other units; horizontal and vertical alignment of each unit can be adjusted and locked in place independently.

The 970 type junction box-crossarm is the same as the previous type 950 design, except for adapter elbows used in attaching the light units.

Roundels furnished are the A.A.R. standard, 8⅜″ diameter, red, with photometric rating for color of 220-300. Listings below show the types available. No. 5323P roundels (red plastic) are furnished unless other type is specified on the order.

The "NO TURN" signal, shown on Page 1-28 in this section is often used in conjunction with flashing light signals at locations where mounting of additional flashing light units would not provide suitable protection. It is the safest method of protecting a street parallel to a railroad without interfering with traffic not crossing the tracks.

In this catalog section no attempt has been made to show all possible combinations of flashing light highway crossing signals. We will gladly furnish plans and information for special assemblies.

Note: Roundels Available for Flashing Lights Units are:

Plastic	Glass	
CL-17P	CL-17,	30° Horizontal Spread.
	5321,	20° Deflecting.
*5323P	5323,	30° Horizontal Spread, 15° Down Deflection.
	5327,	20° Horizontal Spread, 32° Down Deflection.
	5332,	70° Horizontal Spread.
	5333,	Diffusion-deflection Type, with Horizontal and Downward Spread.

* = Standard unless otherwise specified.

Speed Table For Crossing Signal Starts

Seconds		10	15	20	25	30	35	40	45	50	55	60
Miles Per Hour	Feet Per Second	Distance Traveled in Feet										
1	1.46	14.6	22.0	29.3	36.6	44.0	51.3	58.6	66.0	73.3	80.6	88.0
2	2.93	29.3	44.0	58.6	73.3	88.0	102.6	117.3	132.0	146.6	161.3	176.0
3	4.4	44	66	88	110	132	154	176	198	220	242	264
4	5.86	58.6	88	117.3	146.6	176	205.3	334.6	264	293.3	322.6	352
5	7.3	73	110	147	183	220	257	293	330	367	403	440
10	14.6	146	220	293	366	440	513	587	660	733	807	880
15	22.0	220	330	440	550	660	770	880	990	1,100	1,210	1,320
20	29.3	293	440	587	733	880	1,027	1,173	1,320	1,467	1,613	1,760
25	36.7	367	550	733	917	1,100	1,283	1,467	1,650	1,833	2,017	2,200
30	44.0	440	660	880	1,100	1,320	1,540	1,760	1,980	2,200	2,420	2,640
35	51.3	513	770	1,027	1,283	1,540	1,797	2,053	2,310	2,567	2,823	3,080
40	58.7	587	880	1,173	1,467	1,760	2,053	2,347	2,640	2,933	3,227	3,520
45	66.0	660	990	1,320	1,650	1,980	2,310	2,640	2,970	3,300	3,630	3,960
50	73.3	733	1,100	1,467	1,833	2,200	2,567	2,933	3,300	3,667	4,033	4,400
55	80.7	807	1,210	1,613	2,017	2,420	2,823	3,227	3,630	4,033	4,437	4,840
60	88.0	880	1,320	1,760	2,200	2,640	3,080	3,520	3,960	4,400	4,840	5,280
65	95.3	953	1,430	1,907	2,383	2,860	3,337	3,813	4,290	4,767	5,243	5,720
70	102.7	1,027	1,540	2,053	2,567	3,080	3,593	4,107	4,620	5,133	5,647	6,160
75	110.0	1,100	1,650	2,200	2,750	3,300	3,850	4,400	4,590	5,500	6,056	6,600
80	117.3	1,173	1,760	2,347	2,933	3,520	4,107	4,693	5,280	5,867	6,453	7,040
85	124.7	1,247	1,870	2,493	3,117	3,740	4,363	4,987	5,610	6,233	6,858	7,480
90	132.0	1,320	1,980	2,640	3,300	3,960	4,620	5,280	5,940	6,600	7,260	7,920
95	139.3	1,393	2,090	2,787	3,483	4,180	4,877	5,573	6,270	6,967	7,663	8,360
100	146.7	1,467	2,200	2,933	3,667	4,400	5,133	5,867	6,600	7,333	8,067	8,800
105	154.0	1,540	2,310	3,080	3,850	4,620	5,390	6,160	6,930	7,700	8,470	9,240
110	161.3	1,613	2,420	3,227	4,033	4,840	5,647	6,453	7,260	8,067	8,873	9,680
115	168.6	1,686	2,530	3,373	4,217	5,060	5,903	6,747	7,590	8,434	9,277	10,120
120	176.0	1,760	2,640	3,520	4,400	5,280	6,160	7,040	7,920	8,800	9,680	10,560
125	183.3	1,833	2,750	3,667	4,583	5,500	6,417	7,334	8,250	9,167	10,084	11,000
130	190.7	1,907	2,860	3,813	4,767	5,720	6,673	7,627	8,580	9,534	10,487	11,440

NOTE: Where length of track circuit is known, time in seconds can be determined by dividing its length by "Feet Per Second" at train speed selected.

* Does not allow for drop-away time of relays.

Information Desired With Inquiry For Complete Highway Crossing Signal Installation

We are pleased to furnish engineering information and to quote on requirements for Highway Crossing Signal Installations. Where possible, inquiries should be accompanied by a sketch, or preferably, a scale track plan showing the location of the highway.

The following information is especially desired:

1. Is "Railroad Crossing" sign required?*
2. Is number of tracks sign required? If so, advise numeral.*
3. Is "Stop on Red Signal" sign required?**
4. Advise maximum authorized speed of train movement. (A.A.R. recomcomendation is 20 seconds warning for fastest train)
5. What special operating conditions exist within the area?
6. Specify whether there are any switches within the approach section.
7. Specify if there is any signal equipment now in place which might be affected by this installation.
8. Specify whether Diesel-Electric or Electric propulsion railway.
9. What electric power is available for operation of signals? If D.C., specify voltage; if A.C., specify voltage and frequency.
10. Specify whether stand-by electric service is required. (Can continuity of available service be depended upon?)
11. Specify weight and type of rail and whether four or six hole insulated rail joints.
12. Specify if track ballast is rock, gravel, sand, cinders, or other material.
13. State whether highway is paved. Width of highway or travelled portion. Specify class of paving.

*Available in Reflector Unit Type, both synthetic enamel and vitreous enamel finish and in Reflex-Reflecting Sheet Type.

**Not available in vitreous enamel finish.

Type A-479-A
Flashing Light Highway Crossing Signal with Type 970-201 Light Units

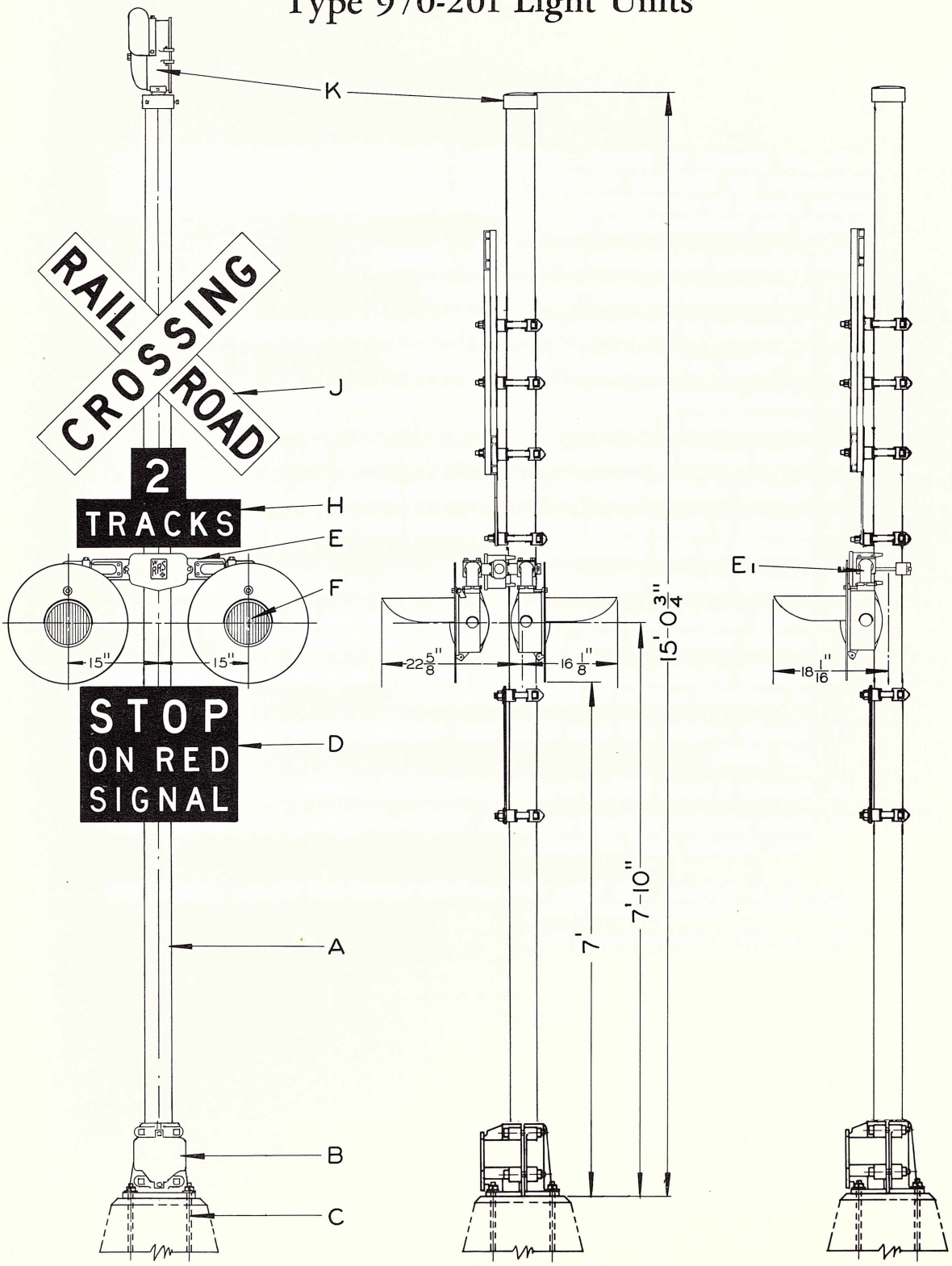

Ref. A Ref. A1 Ref. B1

Type A-479-A
Flashing Light Highway Crossing Signal with Type 970-201 Light Units

By far the majority of Flashing Light Type Highway Crossing Signal installations require two Flashing Light signals, two-way indication; one with a bell and one with a pinnacle, although, frequently two bells are used. Western's A-479A all-aluminum assembly with 4″ I.D. mast, junction box type base having 9½″x9½″ anchor bolt spacing and reflex-reflecting sheet type signs on extruded or sheet aluminum, meet most requirements. Type 222CR Crossing Bell is usually required, but Type 1275CR Pedestrian Crossing Bell will be supplied when specified. Plastic roundels having 30° horizontal spread and 15° down deflection are furnished as standard.

Below are ordering references for these most frequently used assemblies. See Page 1-10 for information for ordering variations from these assemblies.

Ref. No.	Description	Piece No.
A	Flashing light Highway Crossing Signal complete; two-way indication, with 222CR Bell. (specify numeral on track sign and voltage and wattage of incandescent electric lamps, if required)	A479AB
A1	Same as Ref. A, but with pinnacle in place of bell	A479AP
A2	Same as Ref. A less "Stop On Red Signal" sign	A479ABL
A3	Same as Ref. A1 less "Stop On Red Signal" sign	A479APL
B	Flashing Light Highway Crossing Signal complete; one-way indication, with 222CR Bell. specify numeral on track sign and voltage and wattage of incandescent electric lamps, if required)	A479AB-1
B1	Same as Ref. B, but with pinnacle in place of bell	A479AP-1
B2	Same as Ref. B less "Stop On Red Signal" sign	A479ABL-1
B3	Same as Ref. B1 less "Stop On Red Signal" sign	A479APL-1
	See Page 1-10 for information for ordering commonly used variations.	

Type A-479-A
Flashing Light Highway Crossing Signal with Type 970-201 Light Units

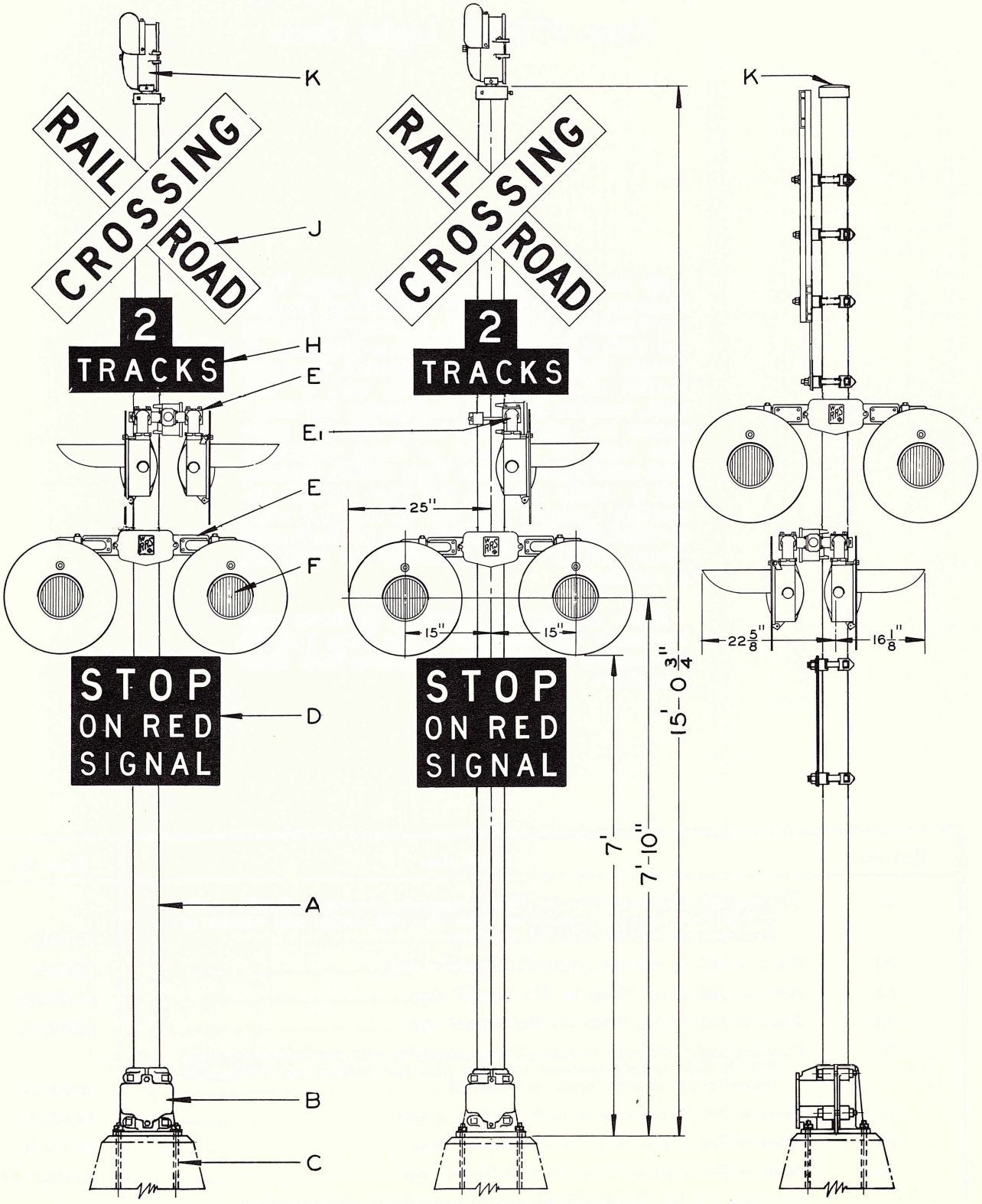

Ref. A Ref. B Ref. B1

Type A-479-A
Flashing Light Highway Crossing Signal with Type 970-201 Light Units

Many locations require Flashing Light Highway Crossing Signals having extra light assemblies to provide indication to traffic on streets or highways paralleling the railroad, or on curved approaches, in addition to the Flashing Lights that provide the indication to traffic on the street or highway that crosses the tracks.

Generally these extra lights are mounted 90° to the right of and above the main lights, as illustrated.

The extra lights can be mounted at any angle which may be specified, or even on special brackets as shown on Page 1-27. Given the requirements we will be pleased to submit drawings of assemblies required.

These commonly used assemblies, with extra lights, are usually Western's all-aluminum A479A type with 4″ I.D. mast, junction box type base having 9½″ x 9½″ anchor bolt spacing and reflex-reflecting sheet type signs on extruded or sheet aluminum. One signal with 222CR bell and one with pinnacle are normally required at each crossing, but the Type 1275CR bell will be supplied when specified. Plastic roundels having 30° horizontal spread and 15° down deflection are furnished as standard.

Below are ordering references for the assemblies illustrated on the opposite page. See Page 1-10 for information for ordering variations from these assemblies.

Ref. No.	Description	Piece No.
A	Flashing Light Highway Crossing Signal complete; two-way indication main lights, two-way indication extra lights mounted 90° to the right and 222CR Bell. (specify numeral on track sign and voltage and wattage of incandescent electric lamps)	A479AB-8
A1	Same as Ref. A, but with pinnacle in place of bell	A479AP-8
A2	Same as Ref. A less "Stop On Red Signal" sign	A479ABL-8
A3	Same as Ref. A1 less "Stop On Red Signal" sign	A479APL-8
B	Same as Ref. A, but with one-way indication extra lights	A479AB-6
B1	Same as Ref. A1, but with one-way indication extra lights	A479AP-6
B2	Same as Ref. B less "Stop On Red Signal" sign	A479ABL-6
B3	Same as Ref. B1 less "Stop On Red Signal" sign	A479APL-6
	See Page 1-10 for information for ordering commonly used variations from these assemblies.	

Type A-479-A
Flashing Light Highway Crossing Signal with Type 970-201 Light Units

When ordering assemblies other than are shown on Pages 1-6 to 1-9 please use the reference data below, enumerating components required.

If extra light assemblies are called for, specify degree of angle to right or left of main lights.

We will gladly furnish plans and information for special assemblies, including supporting brackets as shown on Page 1-27, Marker Lights on Page 1-26, etc.

Ref. No.	Description	Piece No.
1	Type A479-A Aluminum Flashing Light Highway Crossing Signal with the following equipment.	
A	Pipe Mast (See Page 1-11)	
B	Base (See Page 1-13)	
C	Anchor Bolts (See Page 1-11)	
D	"Stop on Red Signal" sign (See Page 1-21)	
E	Flashing Light Assembly (See Page 1-15)	
F	Roundels (See Page 1-3 or 1-14)	
G	Specify voltage and wattage of lamps	
H	"Tracks" sign (See Page 1-23)	
J	"Railroad Crossing" sign (See Page 1-25)	
K	Bells (See Section 5)	
	or Pinnacle (See Page 1-11)	

Type A-479-A
Flashing Light Highway Crossing Signals

PIPE MAST

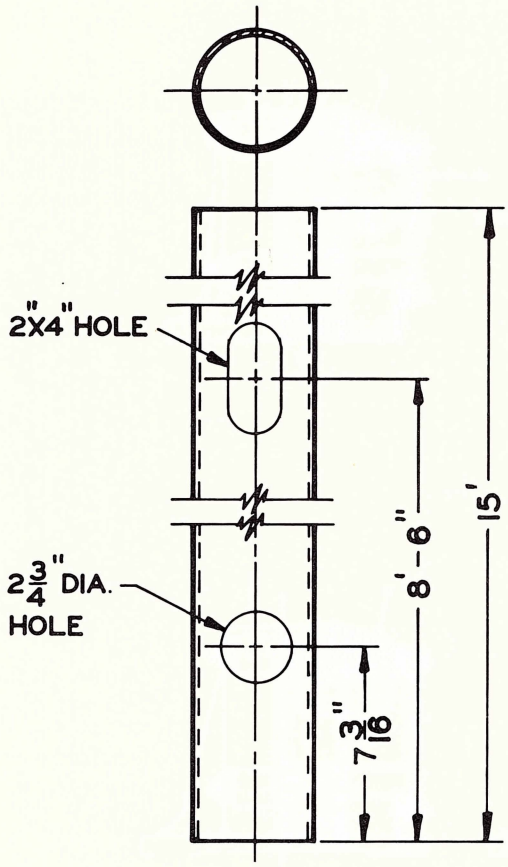

Ref. A

PINNACLE

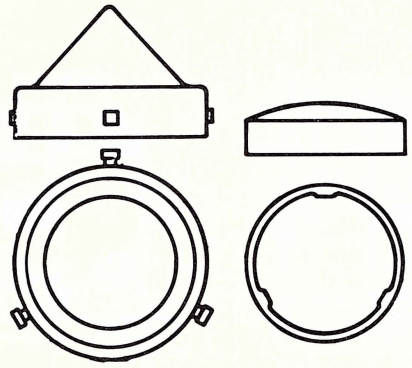

Ref. K1 Ref. K

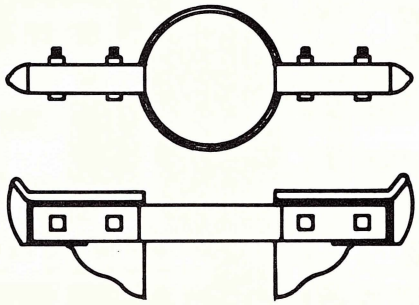

Ref. L

ANCHOR BOLTS

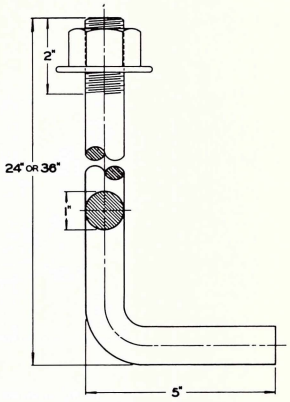

Ref. C & C1

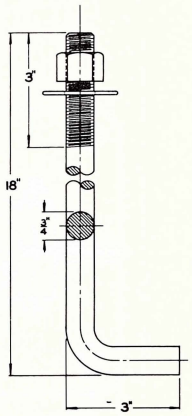

Ref. C2

Ref. No.	Description	Piece No.
A	Pipe Mast. 4″ I.D. x 15′ Long drilled for Jct. Box Base	714-50U-2
A1	Same as Ref. A less Drilling for Jct. Box Base	714-50-1
A2	Same as Ref. A, but 5″ I.D.	715-50U-2
A3	Same as Ref. A1, but 5″ I.D.	715-50-1
C	Type 11079 Anchor Bolt 1″ x 36″ lg. complete with washer and hex. nut (galvanized)	11079
C1	Same as Ref. C, but 24″ lg.	11079-1
C2	Type 2144 Anchor Bolt ¾″ x 18″ lg.	2144-18
K	Type 110 Pinnacle for 4″ I.D. pipe post	110A-6
K1	Same as Ref. K, but for 5″ I.D. pipe post	110-8
L	Pole Step complete for 4″ I.D. pipe post	10151
L1	Same as Ref. L. but for 5″ I.D. pipe post	10152

Type A-479-A
Flashing Light Highway Crossing Signals
Clamp Type Bases

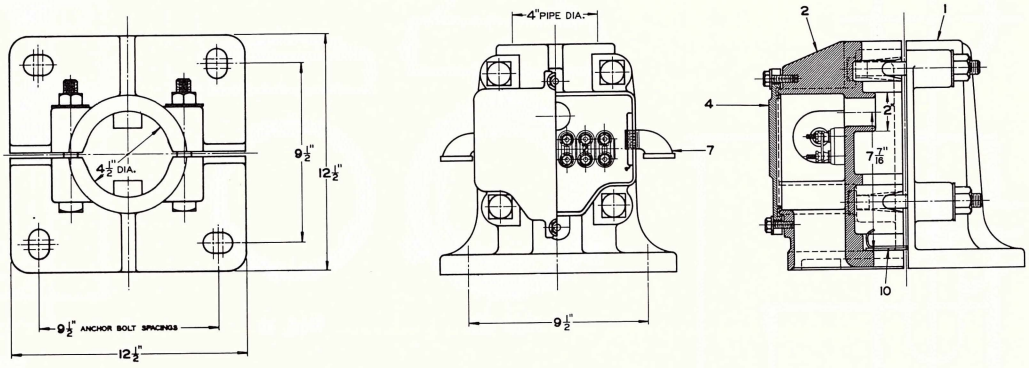

Ref. B & B3

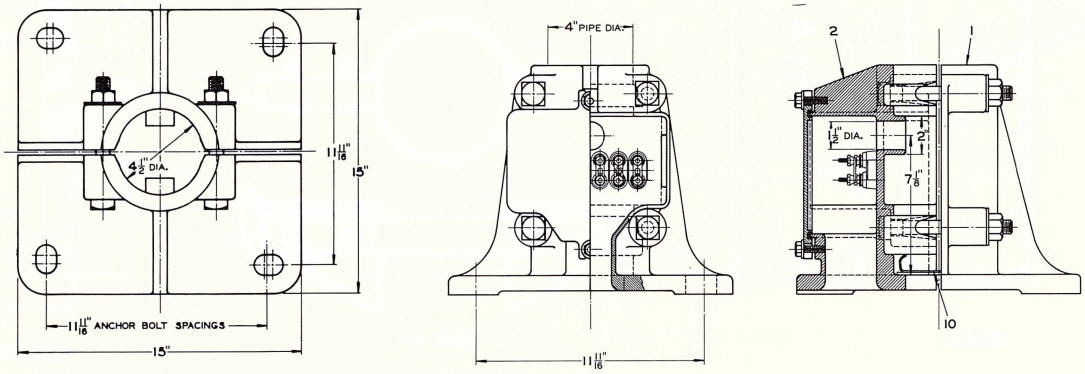

Ref. B1 & B5

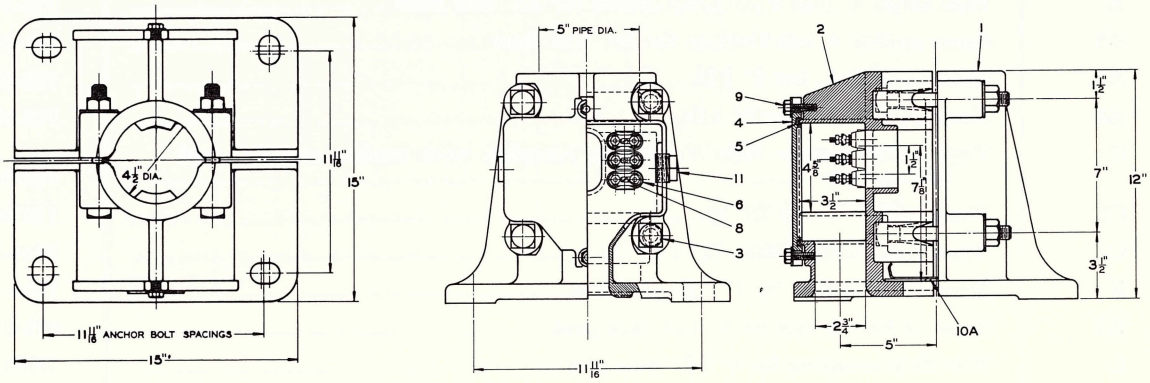

Ref. B6 & B7

Type A-479-A
Flashing Light Highway Crossing Signals
Clamp Type Bases

These clamp type signal bases are available as plain split bases or with one or both halves having a cast-in junction box capable of holding a bakelite terminal strip of 6 units (12 binding posts). The base may be furnished complete or the half with the junction box may be obtained separately for use with signal assemblies already installed.

Ref. No.	Description	Piece No.
B	Type 14492 Plain Split Base Assembly, for 4″ I.D. pipe, with 9½″ x 9½″ anchor bolt spacing. Cast Aluminum	14492A
B1	Type 2143 Plain Split Base Assembly, for 4″ I.D. pipe, with 11-11/16″ x 11-11/16″ anchor bolt spacing. Cast Aluminum	2143A
B2	Type 2145 Plain Split Base Assembly, for 5″ I.D. pipe with 11-11/16″ x 11-11/16″ anchor bolt spacing. Cast Iron	2145
B3	Type 2146 Split Base Assembly with junction box on one half and six terminals, for 4″ I.D. pipe, with 9½″ x 9½″ anchor bolt spacing. Cast Aluminum.	2146A-11
B4	Same as Ref. B3 but junction box on both halves	2146A-12
B5	Type 2146 Split Base Assembly with junction box on one half and six terminals, for 4″ I.D. pipe, with 11-11/16″ x 11-11/16″ anchor bolt spacing. Cast Aluminum.	2147A-11
B6	Same as Ref. B5 but junction box on both halves	2147A-12
B7	Type 2148 Split Base Assembly with junction box on one half and six terminals, for 5″ I.D. pipe, with 11-11/16″ x 11-11/16″ anchor bolt spacing. Cast Iron.	2148-11
B8	Same as Ref. B7, but junction box on both halves	2148-12
	REPLACEMENT PARTS	
1	Plain Half Base Casting for ref. B (cast aluminum)	1449A-1
1A	Plain Half Base Casting for ref. B1 (cast aluminum)	2143A-1
1B	Plain Half Base Casting for ref. B2 (cast iron)	2145-1
2	Junction Box Half Casting for ref. B3 & B4 (cast aluminum)	2146A-15C
2A	Junction Box Half Casting for ref. B5 & B6 (cast aluminum)	2147A-15A
2B	Junction Box Half Casting for ref. B7 & B8 (cast iron)	2148-15
3	¾″ x 6½″ lg. mach. bolt with sq. hd. and hex. nut	
4	Cover (cast iron)	2148-16
4A	Cover (cast aluminum)	2148A-16
5	Flax packing 5/16″ sq. x 29″ lg.	
6	Terminal strip (12 post)	
6A	Terminal strip for ref. B7 & B8 only (6 post)	2506-112
7	Ventilator	2506-106
8	No. 10-32 x ⅝″ lg. rd. hd. mach. screw	1143-16
9	⅜″—16 x 1¼″ lg. hex. cap screw and plain washer	
10	Pipe shield	2147-24
10A	Pipe shield for ref. B7 & B8 only	2149-24
11	Pipe Plug, 1¼″	

Type A-479-A
Flashing Light Highway Crossing Signals
Roundels

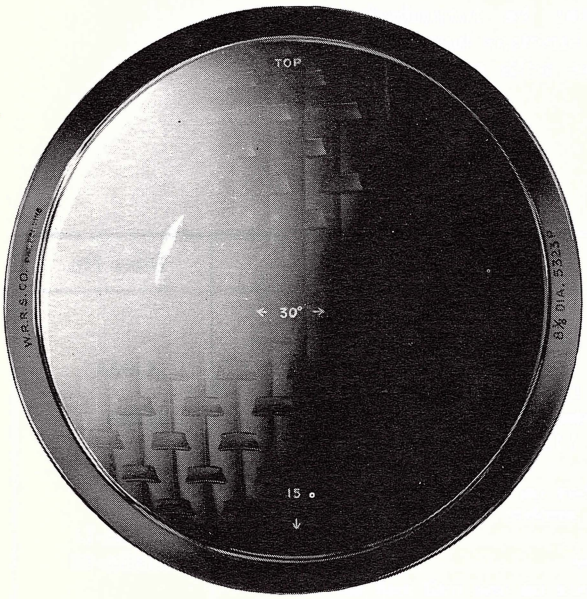

Ref. F4

Roundels furnished are A.A.R. Standard 8⅜″ diameter, Red, with photometric rating for color of 220-300. No. 5323 and 5323P Roundels are recommended by the A.A.R. Signal Section, for general use.

Types CL-17P and 5323P are plastic.

Ref. No.	Description	Piece No.
F	Type CL-17 30° Horizontal Spread Roundel, Glass	CL-17
F1	Same as Ref. F but Plastic	CL-17P
F2	Type 5321 20° Deflecting Roundel, Glass	5321
F3	Type 5323 30° Horizontal Spread, 15° Down Deflecting Roundel, Glass	5323
F4	Same as Ref. F3 but Plastic	5323P
F5	Type 5327 20° Horizontal Spread, 32° Down Deflecting Roundel, Glass	5327
F6	Type 5332 70° Horizontal Spread Roundel, Glass	5332
F7	Type 5333 Diffusion-Deflection Type, with Horizontal and Downward Spread, Glass	5333

Type A-479-A
Flashing Light Highway Crossing Signal with Type 960 Crossarm and Type 970-201 Light Units

CAST ALUMINUM CROSSARM, BRACKETS AND ELBOWS
SHEET ALUMINUM BACKGROUNDS AND HOODS

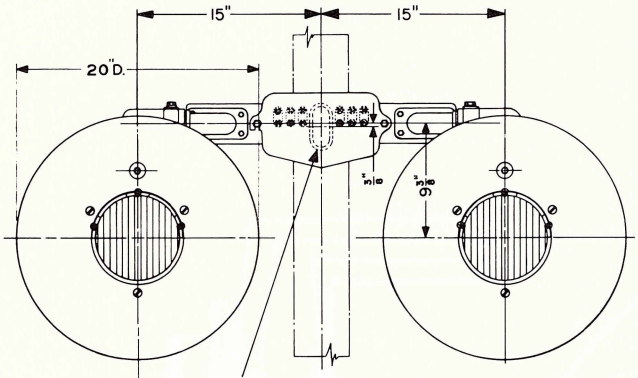

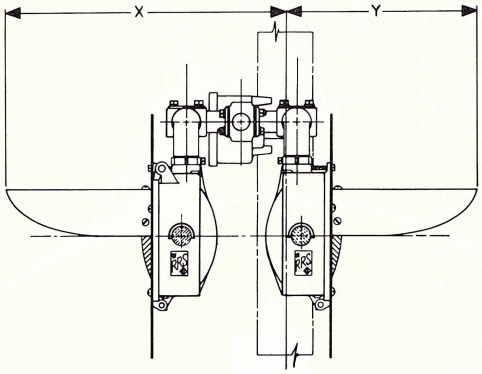

2"X 4"
OVAL HOLE IN PIPE

FLASHING LIGHT SIGNAL-TWO WAY INDICATION
TYPE NO. 970 – 204

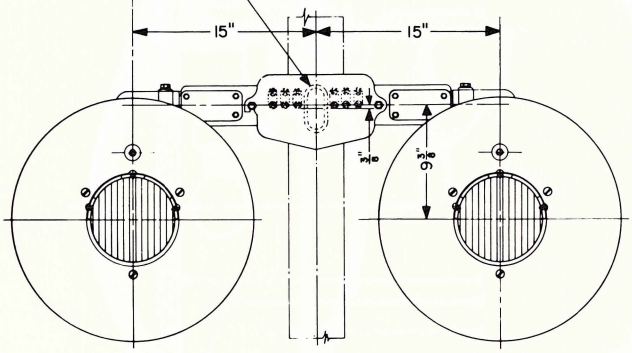

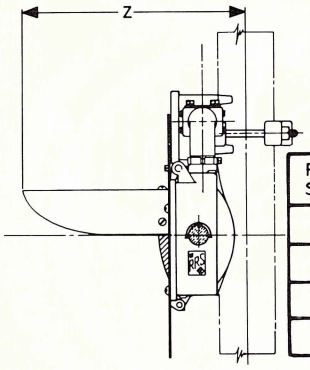

PIPE SIZE	DIM. X	DIM. Y	DIM. Z
4" I.D.	22 5/8"	16 1/8"	18 1/16"
5" I.D.	23 5/16"	15 7/16"	18 3/4"
6" I.D.	23 15/16"	14 13/16"	19 3/8"
8" I.D.	25 1/8"	13 5/8"	20 9/16"

FLASHING LIGHT SIGNAL-ONE WAY INDICATION
TYPE NO. 970 – 202

Type 970-201 Light Units are equipped with Parabolic glass reflectors, 8 3/8" diameter red roundels and single contact, bayonet base, receptacles positioned to accommodate S-8 or S-11 bulb electric lamps, having 2 1/4" light center length.

Ref. No.	Description	Piece No.
E	Type 970 Flashing Light Unit Assembly with Type 960 junction box crossarm for two-way indication, 4 light units. (If ordering other than with complete flashing light highway crossing signal specify I.D. of pipe and roundels desired)	970-204
E1	Same as Ref. E but one-way indication, 2 light units	970-202
E2	Type 970 Light Unit only	970-201
E3	Type 960 Junction Box Crossarm for two-way indication. (Specify I.D. of pipe)	960-5
E4	Same as Ref. E3 but for one-way indication	960-3

For replacement parts see page 1-17 and 1-19.

Type A-479-A
Flashing Light Highway Crossing Signal
Type 970-201 Light Unit

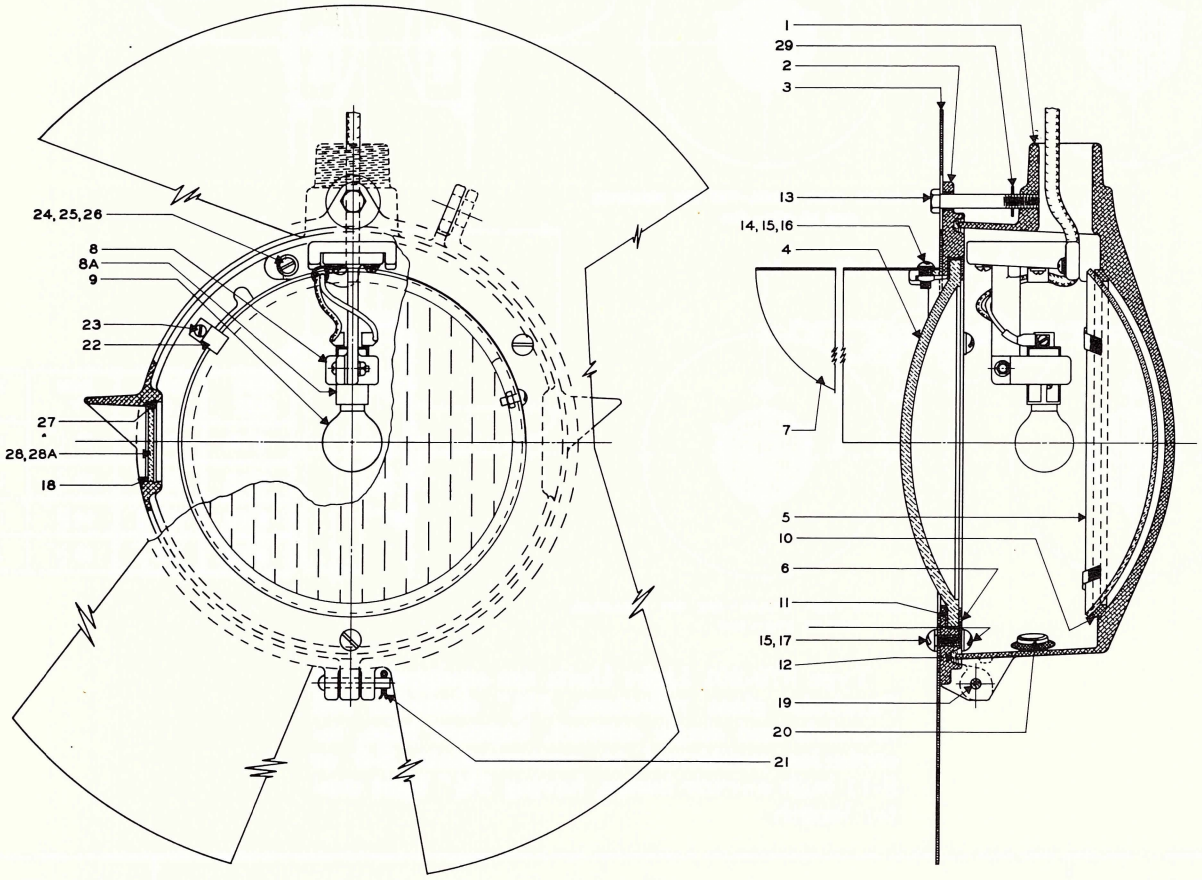

Ref. A

Type A-479-A
Flashing Light Highway Crossing Signal
Type 970-201 Light Unit

All castings in the Type 970-201 Light Unit are aluminum, with sheet aluminum hood and background.

Ref. No.	Description	Piece No.
A	Type 970 Flashing Light Unit assembly, specify roundel desired and voltage and wattage of lamp, if required	970-201
	REPLACEMENT PARTS	
1	Case	970-1
2	Cover	970-2
3	Background	960-13
4	Roundel (see page 1-3)	
5	Reflector	950-275C
6	Roundel Retainer	960-19
7	Hood	960-9
8	Lamp Bracket and Socket sub-assembly	970-20
8A	Lamp Receptacle with insulating sleeve	970-18
9	Electric Lamp (specify voltage and wattage)	
10	Reflector Supporting Ring	970-16
11	Roundel Gasket	825
12	Door Packing	960-18
13	5/16″ x 2¼″ lg. hex. hd. cap screw, steel	
14	¼″ x 20 x ½″ lg. rd. hd. mach. screw	
15	¼″ Internal Tooth Lock Washer	
16	¼″-20 Sq. nut, brass	
17	¼″-20 x ¼″ lg. rd. hd. mach. screw, brass	
18	Side Light Gasket	960-48
19	Hinge Pin	950-259
20	Ventilator	1265-6
21	3/32″ x ⅝″ lg. Cotter Pin	
22	Reflector Holding Clip	970-17
23	No. 8-32 x ½″ lg. rd. mach. screw	
24	No. 10-24 x ¾″ lg. rd. hd. mach. screw	
25	No. 10 Plain Washer	
26	No. 10 Spring Lock Washer	
27	Retaining Ring	960-7
28	Side Light Glass Disc	811
28A	Side Light Blank Plate	950A-261
29	Crescent Retainer	960-15

Type A-479-A
Flashing Light Highway Crossing Signals
Type 960 Crossarm

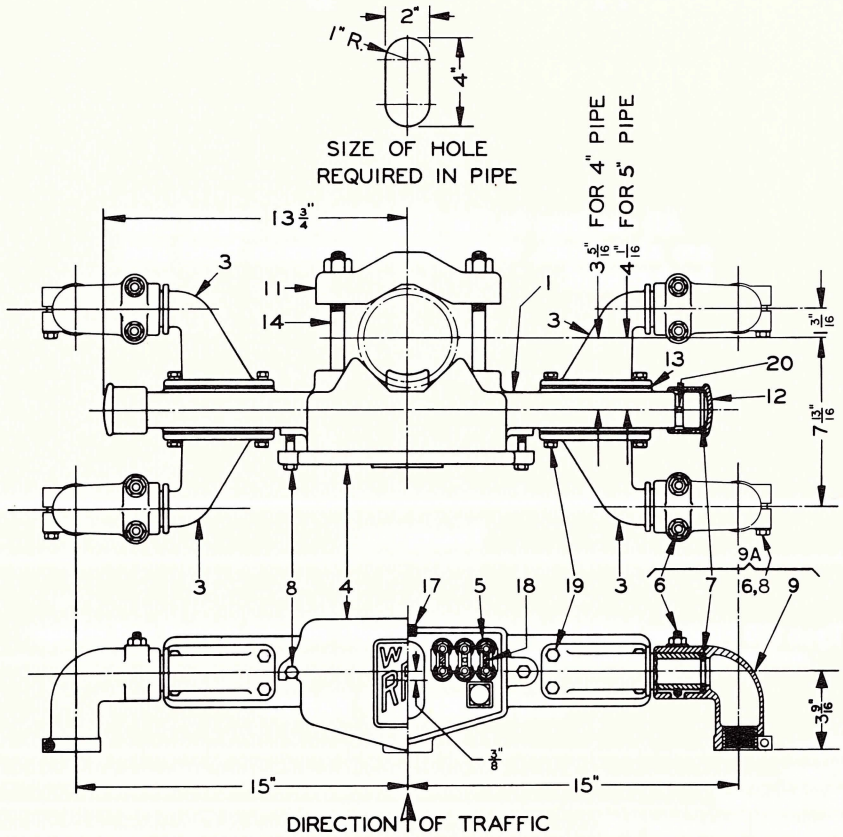

Ref. A

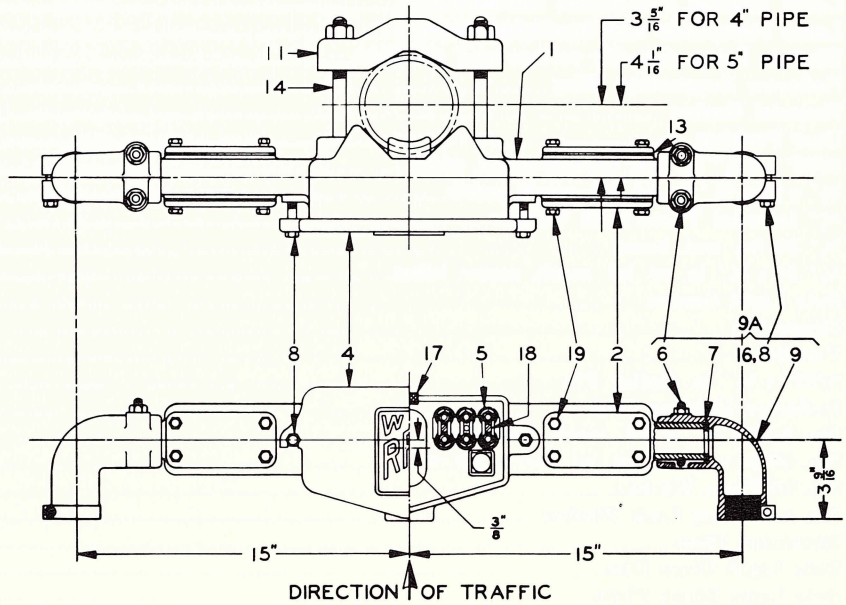

Ref. B

Type A-479-A
Flashing Light Highway Crossing Signals
Type 960 Junction Box Crossarm

All castings in the Type 960 Junction Box Crossarms are aluminum. Replacements parts of cast aluminum are interchangeable with cast iron parts of former designs and will be furnished for all replacements.

Ref. No.	Description	Piece No.
A	Type 960 Junction Box Crossarm for two-way indication. (Specify I.D. of pipe)	960-5
B	Same as Ref. A but for one-way indication	960-3
	REPLACEMENT PARTS	
1	Junction Box Crossarm casting only	950A-22
1A	Junction Box Crossarm, sub-assembly of Ref. 1, 4, 5, 17 & 18	950A-62
2	Cover Plate	950A-39
3	Bracket, 3½″ extension	950A-57
4	Cover	950A-20
5	Terminal Block, complete, 6 binding posts	2506-106
6	"U" Bolt, ⅜″-16, complete with nuts	950-31
7	Gasket, sponge rubber	950-28
8	⅜″-16 x 2″ lg. hex. hd. cap screw, steel	
9	Supporting Bracket casting only	960-131
9A	Supporting Bracket, sub-assembly of Ref. 6, 7, 8, 9, & 16	960-163
11	Adapter Clamp	950A-34
12	Cap	950A-29
13	Gasket, Cork	950-27
14	⅝″-11 x 6″ lg. sq. hd. mach. bolt and hex. nut for 4″ pipe	
14A	⅝″-11 x 7½″ lg. sq. hd. mach. bolt and hex. nut for 5″ pipe	
16	⅜″ lock washer, steel	
17	⅜″ dia. x 27″ lg. torchwick packing	
18	No. 10-32 x ⅝″ lg. fil. hd. mach. screw and lock washer, steel	
19	⅜″-16 x ⅞″ lg. hex. hd. cap screw and lock washer, steel	
20	¼″-20 x ½″ lg sq. hd. cup pt. set screw, steel	

Type A-479-A
Flashing Light Highway Crossing Signals

"STOP ON RED SIGNAL" SIGN

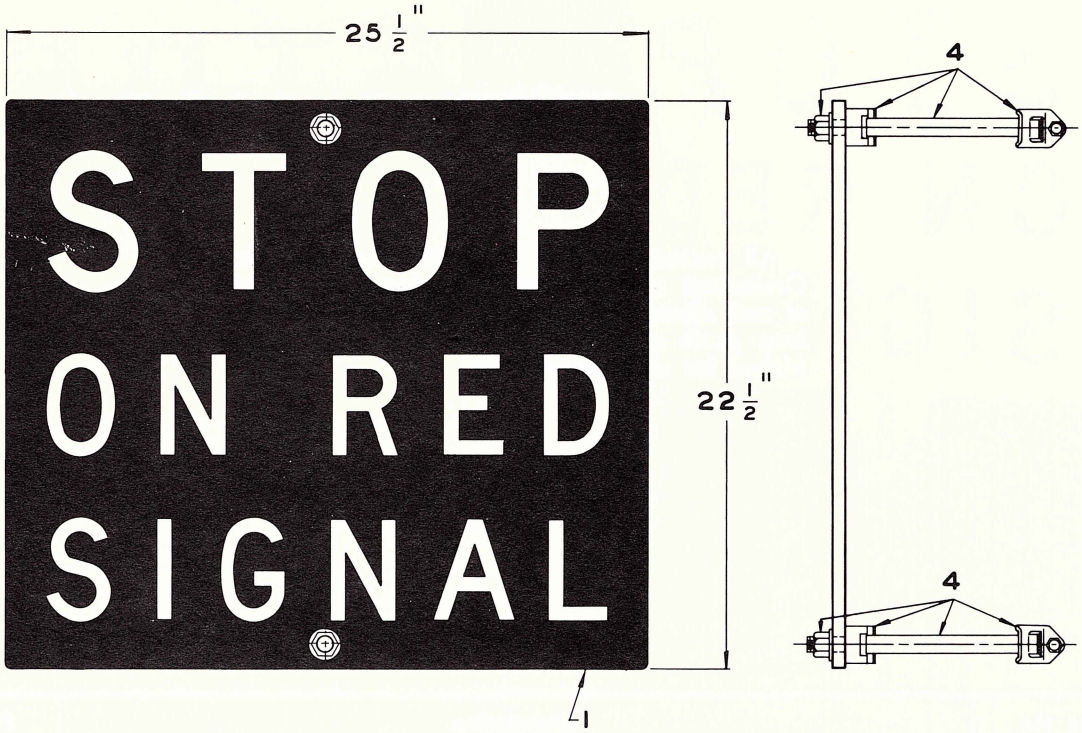

Ref. D

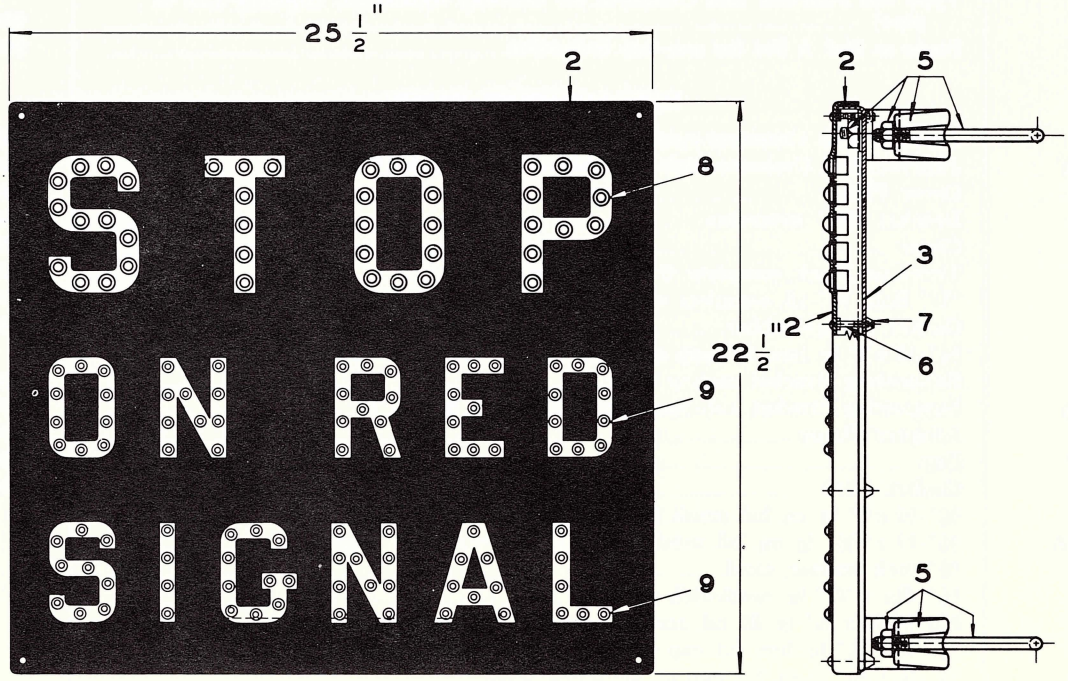

Ref. D1 & D2

Type A-479-A
Flashing Light Highway Crossing Signals

"STOP ON RED SIGNAL" SIGN

Ref. D

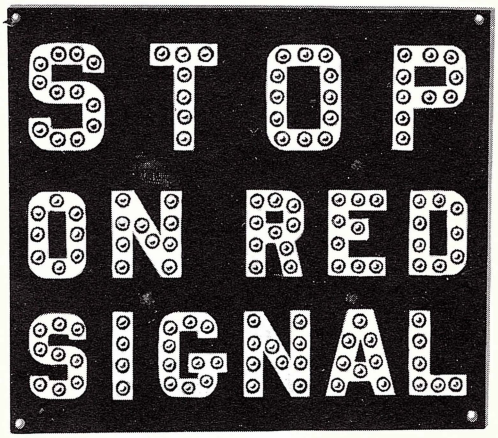

Ref. D1 & D2

Type 3366 "Stop on Red Signal" sign, Reflex-Reflecting Sheet type is on an aluminum plate. White letters on black background. Stainless steel strapping is used for mounting the sign on the pole.

Type 3366 "Stop on Red Signal" sign, Synthetic Baked Enamel, embossed steel front plate with front entrance clear reflector units and telescoping steel back. The screws and nuts are theft-resisting type. White letters on black background. Adaptor clamps and "U" bolts are used for mounting the sign on the pole.

Ref. No.	Description	Piece No.
D	Type 3366 "Stop on Red Signal" sign. Reflex-Reflecting sheet type on aluminum plate with stainless steel strap kit complete for mounting on 4″ or 5″ I.D. pipe mast	3366-7
D1	Type 3366 "Stop on Red Signal" sign with synthetic baked enamel finish and adaptor clamp kit complete for mounting on 4″ I.D. pipe mast	3366-4
D2	Same as Ref. D1 but for 5″ I.D. pipe mast	3366-4A
	REPLACEMENT PARTS	
1	"Stop on Red Signal" aluminum plate only for Ref. D	3366-7L
2	"Stop on Red Signal" front plate, synthetic baked enamel finish, for Ref. D1 & D2	3366-4L
3	Steel back plate for Ref. D1 & D2	3366-12
4	Stainless steel strap mounting kit complete for one sign	3366-815
5	Adaptor clamp mounting kit for 4″ I.D. pipe mast complete for one sign	3380-311-4
5A	Same as Ref. 5, but for 5″ I.D. pipe mast	3380-311-5
6	3/16″-24 x 1⅜″ lg. stl. carriage bolt, (cad. pl.)	
7	3/16″-24 Theftproof nut	3380-27X
8	No. 3F Plastic Reflector unit, clear	
9	No. 5F Plastic Reflector unit, clear	

Type A-479-A
Flashing Light Highway Crossing Signals

NUMBER OF TRACKS SIGN

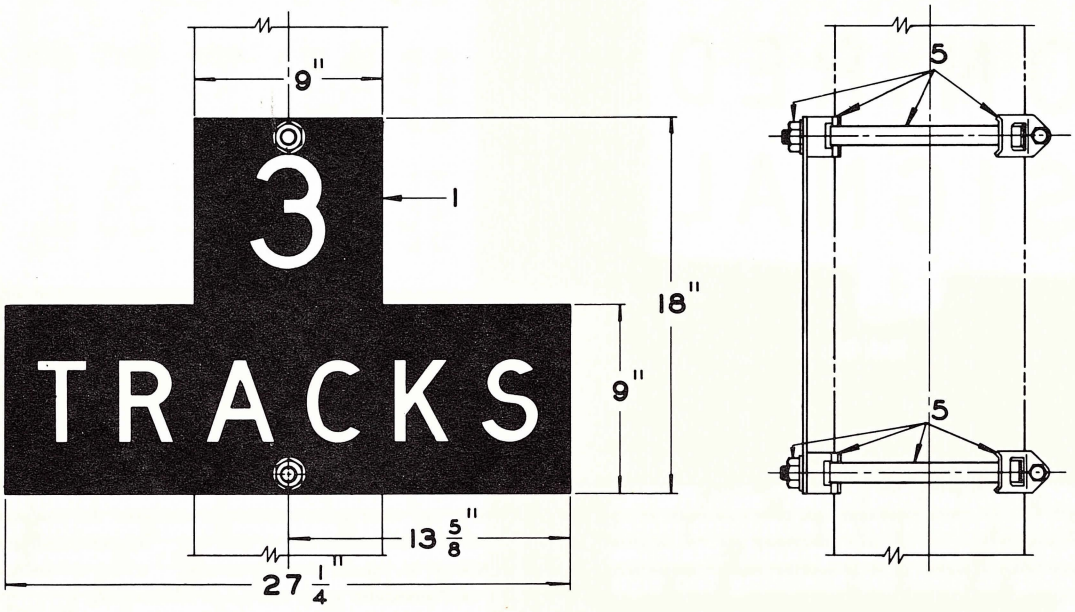

Ref. H

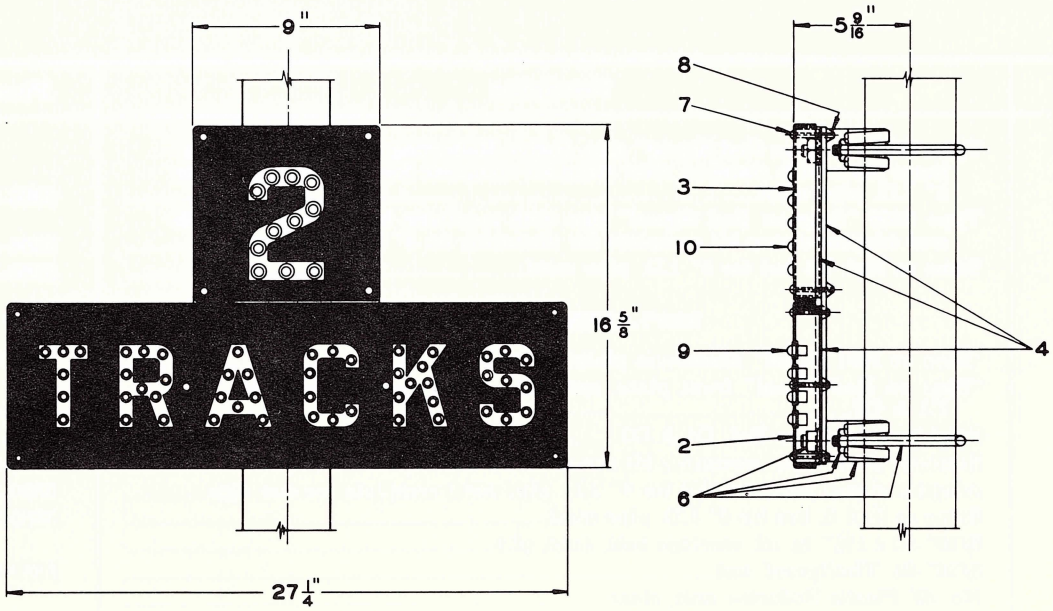

Ref. H2

Type A-479-A
Flashing Light Highway Crossing Signals

NUMBER OF TRACKS SIGN

Ref. H

Ref. H2

Type 3368 Number of Tracks Sign Reflex-Reflecting Sheet type is on an aluminum plate with white letters on black background, or black letters on white background. Stainless steel strapping is used for mounting the sign on the pole.

Type 3368 Number of Tracks Sign with Synthetic baked enamel; embossed steel front plate with front entrance clear reflector buttons and telescoping steel back. All the screws and nuts are stainless steel, theft-resisting type. White letters on black background. Adaptor clamps and "U" bolts are used for mounting the sign on the pole.

The Vitreous Enamel finish sign is the same as the Synthetic but does not have embossed letters.

Specify numeral required.

Ref. No.	Description	Piece No.
H	Type 3368 Number of Tracks Sign, Reflex-Reflecting sheet type on aluminum plate with white letters on black background and stainless steel strap kit complete for mounting on 4″ or 5″ I.D. pipe mast. (Specify numeral required.)	3368-7C
H1	Same as Ref. H, but with black letters on white background	3368-7CL
H2	Type 3368 Number of Tracks Sign, Synthetic Baked Enamel finish, and adaptor clamp kit complete for mounting on 4″ I.D. pipe mast. (Specify numeral required.)	3368-4
H3	Same as Ref. H2, but for 5″ I.D. pipe mast	3368-4A
H4	Type 3368 Number of Tracks Sign, Vitreous Enamel finish, and adaptor clamp kit complete for mounting on 4″ I.D. pipe mast. (Specify numeral required.)	3368-3
H5	Same as Ref. H4, but for 5″ I.D. pipe mast	3368-3A
	REPLACEMENT PARTS	
1	Number of Tracks aluminum plate only, white letters on black background. (Specify numeral required.)	3368-710
1A	Same as Ref. 1 but black letters on white reflecting background	3368-710A
2	"Tracks" front plate, synthetic baked enamel finish for Ref. H2 and H3	3368-27D
2A	Same as Ref. 2 but vitreous enamel for Ref. H4 and H5	3368-27C
3	Numeral front plate synthetic baked enamel finish for Ref. H2 and H3. (Specify numeral required.)	3368-32D
3A	Same as Ref. 3 but vitreous enamel for Ref. H4 and H5	3368-32C
4	Steel back plate assembly for Ref. H2 through H5	3368-20
5	Stainless steel strap mounting kit, complete for one sign	3366-815
6	Adaptor clamp mounting kit for 4″ I.D. pipe mast complete for one sign	3380-311-4
6A	Same as Ref. 6 but for 5″ I.D. pipe mast	3380-311-5
7	3/16″-24 x 1⅜″ lg. stl. carriage bolt, (cad. pl.)	
8	3/16″-24 theftproof nut	3380-27X
9	No. 5F Plastic Reflector unit, clear	
10	No. 3F Plastic Reflector unit, clear	

Type A-479-A
Flashing Light Highway Crossing Signals

"RAILROAD CROSSING" SIGN

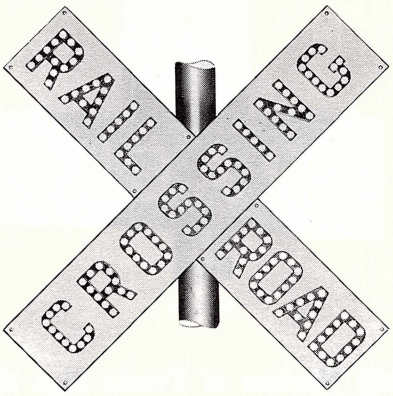

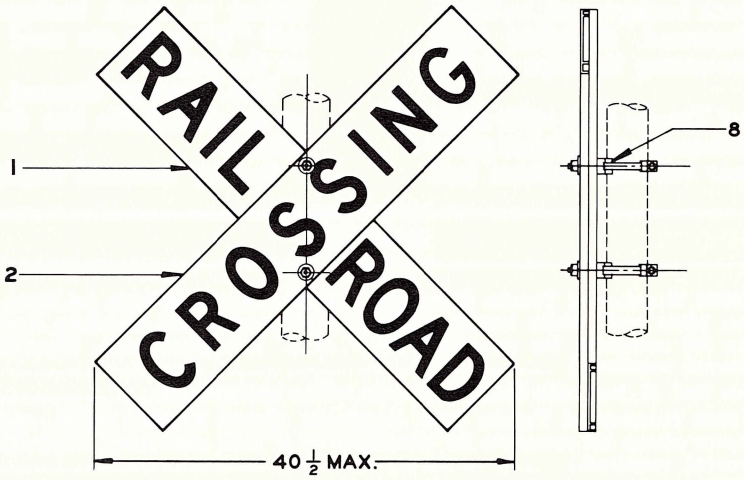

Ref. J

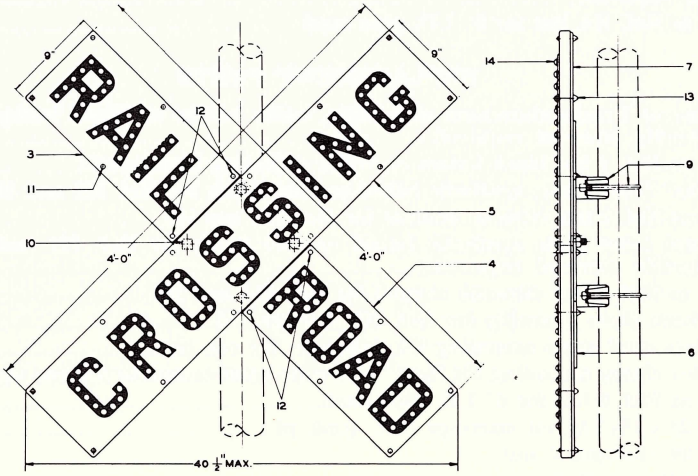

Type A-479-A
Flashing Light Highway Crossing Signals

"RAILROAD CROSSING" SIGN

Type 3380 Railroad Crossing Sign, Reflex-Reflecting Sheet Type is on extruded aluminum, with black letters on white reflecting background. Stainless steel strapping is used for mounting the sign on the pole.

Type 3380 Railroad Crossing Sign, Synthetic baked enamel, embossed steel front plate, with front entrance clear reflector units and telescoping steel back. All the screws and nuts are theft-resisting type. Black letters on white background. Adaptor clamps and "U" bolts are used for mounting the sign on the pole.

The Vitreous Enamel finish sign is the same as the Synthetic, but does not have embossed letters.

Type 3252 Railway Crossing Sign is furnished on extruded aluminum only, with black letters on white reflecting background.

Ref. No.	Description	Piece No.
J	Type 3380 "Railroad Crossing" Sign, Reflex-Reflecting sheet type on extruded aluminum plate with stainless steel strap kit complete for mounting on 4″ or 5″ I.D. pipe mast	3380-7
J1	Type 3380 "Railroad Crossing" Sign, Synthetic Baked Enamel finish, with adaptor clamp kit complete for mounting on 4″ I.D. pipe mast	3380-4
J2	Same as Ref. J1, but for 5″ I.D. pipe mast	3380-4A
J3	Type 3380 "Railroad Crossing" Sign, Vitreous Enamel finish, with adaptor clamp kit complete for mounting on 4″ I.D. pipe mast	3380-3
J4	Same as Ref. J3, but for 5″ I.D. pipe mast	3380-3A
J5	Type 3252 "Railway Crossing" sign, Reflex-Reflecting sheet type on extruded aluminum plate with stainless steel strap kit complete for mounting on 4″ or 5″ I.D. pipe mast	3252-7
	REPLACEMENT PARTS	
1	"RAILROAD" Plate, Reflex-Reflecting sheet on extruded aluminum for Ref. J only	3380-7R
1A	Same as Ref. 1, but "RAILWAY" Plate, for Ref. J5 only	3252-7R
2	"CROSSING" Plate, Reflex-Reflecting sheet on extruded aluminum for Ref. J and J5	3380-7C
3	"RAIL" Front Plate, synthetic baked enamel finish, complete with reflector units for Ref. J1 and J2 only	3380-14C
3A	Same as Ref. 3, but vitreous enamel finish	3380-14A
4	"ROAD" Front Plate, synthetic baked enamel finish, complete with reflector units for Ref. J1 and J2 only	3380-15C
4A	Same as Ref. 4 but vitreous enamel finish	3380-15A
5	"CROSSING" Front Plate, synthetic baked enamel finish, complete with reflector units for Ref. J1 and J2	3380-16C
5A	Same as Ref. 5, but vitreous enamel finish	3380-16A
6	Back Plate for "RAILROAD" Front Plates for Ref. 3 thru 4A	3380-12A
7	Back Plate for "CROSSING" Front Plates for Ref. 5 and 5A	3380-20A
8	Stainless Steel Strap Kit, complete for one sign	3366-815
9	Adaptor Clamp Kit for 4″ I.D. pipe mast, for one sign	3380-311-4
9A	Adaptor Clamp Kit for 5″ I.D. pipe mast, for one sign	3380-311-5
10	⅝″-11 x 1¼″ lg. sq. hd. mach. bolt	
11	3/16″-24 x 1¼″ lg. carr. bolt, brass	
12	3/16″-24 x 1½″ lg. carr. bolt, brass	
13	3/16″-24 Theft-Proof Nut, brass	
14	No. 3F Plastic Reflector units, clear	
15	Key for theftproof nut, steel (not illustrated)	3380-27K

Marker Lights for Highway Crossing Signals

Ref. A

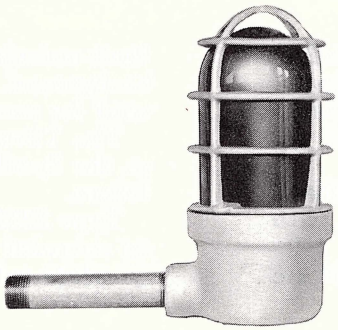

Ref. B

Ref. C

The various Marker Lights are intended for use where Crossing Signals are, of necessity, mounted close to the curb-line or on center-of-street islands. Except Type 1585-80, they are supplied with Red or Yellow glassware, as specified.

Ref. No.	Description	Piece No.
A	Type 1553 Marker Light, with Single Contact, Bayonet Base, lamp receptacle and 3½″ dia., 2¼″ focus, red lenses	1553-20R
A1	Same as Ref. A, but with yellow lenses	1553-20A
B	Type 675 Marker Light, with Medium Screw Base lamp receptacle and Red Globe	675-R
B1	Same as Ref. B, but with yellow globe	675-A
C	Type 1585-80 Marker Light, with Single Contact, Bayonet Base, lamp receptacle and Red, Fresnel, Lens	1585-80R
	REPLACEMENT GLASSWARE	
1	Red Lens, 3½″ dia. x 2¼″ Focus	5325
1A	Same as Ref. 1, but yellow	5325A
2	Red Globe for Type 675 Marker Light	90801-1R
2A	Yellow Globe for Type 675 Marker Light	90801-1Y
3	Red Fresnel Lens	1575-11P

Supporting Brackets
Type 3565-267 and Type 3567-367

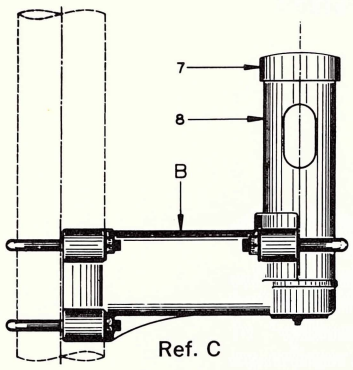

Ref. C

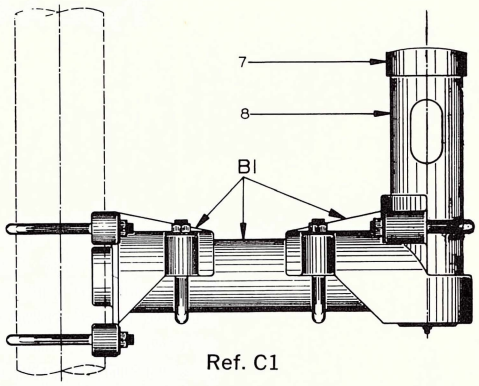

Ref. C1

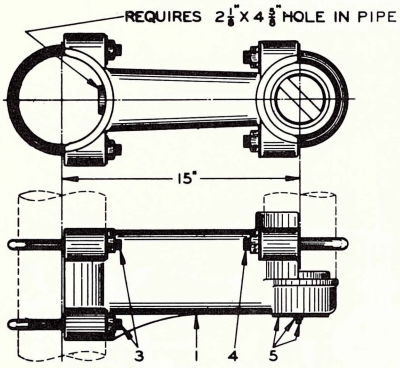

Ref. B

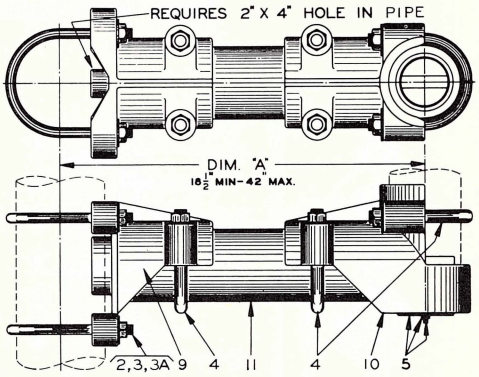

Ref. B1

For mounting Crossing Signal Light Units, with standard Junctionbox Crossarms, at one side of the mast, as necessitated by obstructions to the view, or for mounting extra light units for warnings along side-roads, etc.

The Type 3565-367 Supporting Bracket is of cast iron, designed for mounting on 5″ mast, and provides a 15″ offset of the dowel mast.

The Type 3565-267 Supporting Bracket consists of castings and a length of 4″ I.D. pipe, which may be varied in length, to provide an offset of the dowel mast, of 18½″, minimum, up to 42″, maximum. The inner bracket, with appropriate "U" Bolts, will fit 4″, 5″ or 6″ I.D. pipe.

Either One-way or Two-way Indication Light Assemblies may be mounted on the dowel masts, which can be turned in the socket to any desired angle.

Ref. No.	Description	Piece No.
B	Supporting Bracket Assembly, Less Dowel Mast	3565-67
B1	Supporting Bracket Assembly, Less Dowel Mast. (Specify Dimension "A" and diameter of signal mast.)	3565-167
C	Supporting Bracket and Dowel Mast Assembly	3565-367
C1	Supporting Bracket and Dowel Mast Assembly. (Specify Dimension "A" and diameter of signal mast)	3565-267
	REPLACEMENT PARTS	
1	Bracket only	3565-69
2	"U" Bolt, for 4″ I.D. Pipe Mast	1264-4
3	"U" Bolt, for 5″ I.D. Pipe Mast	1264-5
3a	"U" Bolt, for 6″ I.D. Pipe Mast	1264-6
4	"U" Bolt, for 4″ I.D. Pipe Extension or Dowel Mast	3565-163
5	Cover and Clamp, for wire opening	3565-162A
7	Pinnacle, for 4″ I.D. Pipe	110-6
8	Dowel Mast, 4″ I.D. x 14″ long, or length as specified	714-8
9	Inner Support, Casting only	3565-168
10	Outer Support, Casting only	3565-166
11	Extension Pipe, 4″ I.D. x length as required	

No Turn Signals
Type A457 and Type A534

Signals of this type are often used in conjunction with Flashing Light Signals at locations where the use of additional Lights on the signal mast would not provide suitable added protection. Their use is the safest method of protecting street or highway traffic on roadways running parallel to the railroad without interfering with traffic not crossing the tracks.

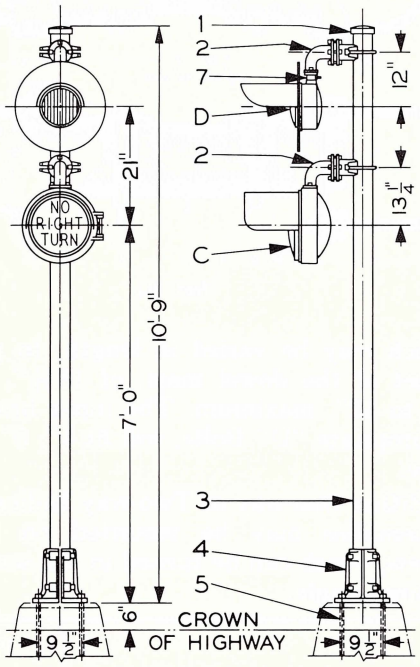

Ref. A

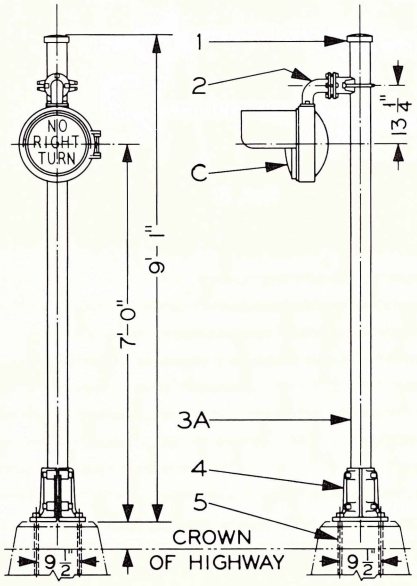

Ref. B

NOTE:
1 — For ordering references for these signals and components see following page.
2 — For ordering references for replacement parts for Yellow Light Unit see Page 1-17 in this Catalog Section.
3 — Replacement Parts List for NO TURN Sign will be furnished on request.
4 — The No Turn Light Unit will be furnished with other legend, as may be required, stenciled on inner glass.

No Turn Signals
Type A457 and Type A534

Ref. No.	Description	Piece No.
A	"NO LEFT TURN" Signal with Yellow Flashing Light Unit, Pole, Base, Pinnacle and Anchor Bolts	A457L
A1	Same as Ref. A but, "NO RIGHT TURN"	A457R
A2	Same as Ref. A but, "NO TURN"	A457N
B	"NO LEFT TURN" Signal with Pole, Base, Pinnacle and Anchor Bolts	A534L
B1	Same as Ref. B but, "NO RIGHT TURN"	A534R
B2	Same as Ref. B but, "NO TURN"	A534N
C	"NO LEFT TURN" Sign with Adaptor Bracket and "U" Bolt	939-1L
C1	Same as Ref. C but, "NO RIGHT TURN"	939-1R
C2	Same as Ref. C but, "NO TURN"	939-1N
C3	"NO LEFT TURN" Sign, only, (without Bracket and "U" Bolt)	939-1LX
C4	Same as Ref. C3 but, "NO RIGHT TURN"	939-1RX
C5	Same as Ref. C3 but, "NO TURN"	939-1NX
D	Yellow Flashing Light Unit, with Adaptor Bracket and "U" Bolt	970-501Y
D1	Same as Ref. D but, without Bracket and "U" Bolt	970-201Y
	REPLACEMENT PARTS	
1	Pinnacle, for 4″ I.D. Pipe Mast	110A-6
2	Adaptor Bracket with "U" Bolt, nuts and washers	939-51
3	Pipe Mast, 4″ I.D. x 10′8″ long, for A457 signal	714-21-3
3A	Pipe Mast, 4″ I.D. x 9′0″ long, for A534 sign	714-20-2
4	Split Base, for 4″ I.D. Pipe Mast	14492A
5	Anchor Bolt, 1″ x 24″ long, with Hexagon Nut and Washer	11079-1
6	Transparent Outer Cover	221718
7	Adaptor for mounting Type 970-201Y Light Unit on Ref. 2	950-72B

NOTE:

1 — 10 Volt, 25 Watt, Single Contact, Bayonet Base, Electric Lamps, S-11 Bulb, having light center length of 1¼″, are recommended for the NO TURN signs, but are not furnished unless specified on order.

2 — No Turn Sign and Yellow Flashing Light Unit mounting Brackets are furnished with "U" Bolts for 4″ Pipe Mast, unless otherwise specified.

Type 950A-201 Crossing Signal Light Unit

(Single Contact, Bayonet Base, Receptacle)

REPLACEMENT PARTS ONLY

(Manufacture Discontinued)

All Castings in the Type 950A-201 Light Unit are Aluminum. Replacement parts of cast aluminum will be furnished. Aluminum and cast iron parts are physically interchangeable.

Sheet Aluminum Hoods and Backgrounds will be furnished on all orders.

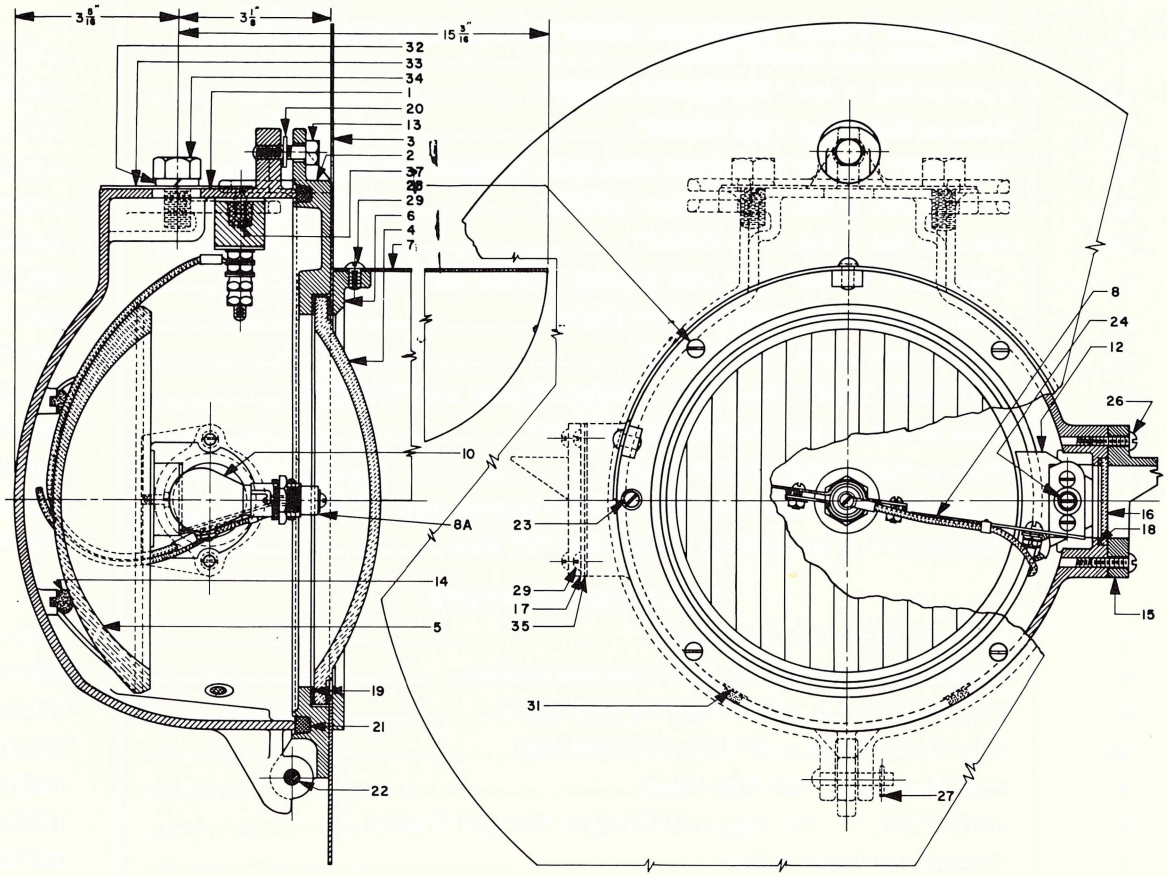

NOTE:
1 — For ordering references for replacement parts for this Light Unit see following page.
2 — For ordering references for replacement parts for the Older Style, Type 950-1, Light Unit see Plate D370 in Old Catalog Section D, Part No. 2.

Type 950A-201 Crossing Signal Light Unit

(Single Contact, Bayonet Base, Receptacle)

REPLACEMENT PARTS ONLY
(Manufacture Discontinued)

Ref. No.	Description	Piece No.
1	Case	950A-11
2	Cover	950A-12
3	Background	950-13A
4	Roundel, (See listing Page 1-3)	
5	Mangin Mirror Reflector	822
6	Roundel Retaining Ring	802-1A
7	Hood	823-1A
8	Lamp Bracket and Receptacle, sub-assembly	950-250A
8a	Lamp Receptacle and Adjusting Nut, only	950-255
10	Single Contact, Bayonet Base Lamp, (Specify Voltage and Wattage)	
12	Reflector Retaining Plate	880-211
13	Cap Screw, 5/16″ x ⅞″ long, Hexagon Head, Steel	
13a	Cap Screw and Retaining Washer Assembly	950-270R
14	Reflector Pad	880-15
15	Side Light Hood	880A-23
16	Side Light Glass Disc	811
17	Side Light Blank Cover	801-3
18	Side Light Gasket	818-48
19	Roundel Gasket	825
20	Retaining Washer	950-270
21	Packing, for cover	880-18
22	Hinge Pin and Cotter	950-259A
23	Machine Screw, No. 10-32 x ½″ long, Fillister Head, Brass	
24	Machine Screw, No. 10-32 x ⅜″ long, Fillister Head, Brass	
25	Machine Screw, No. 10-32 x ⅝″ long, Round Head, Brass	
26	Machine Screw, ¼″-20 x ¾″ long, Round Head, Brass	
27	Cotter Pin, 3/32″ x ⅝″ long, Steel	
29	Machine Screw, ¼″-20 x ⅜″ long, Round Head, Brass	
31	Ventilator	818-49
32	Lock Washer, ½″, Steel	
33	Gasket	950-17
34	Cap Screw, ½″-13 x 1¼″, Hexagon Head, Steel	
35	Gasket	801-2
37	Cover sub-assembly, includes references 2, 13, 20 and 21	950A-231

Junction Box Cross Arm For Mounting Type 950A-201 Crossing Signal Light Units

REPLACEMENT PARTS ONLY

(Manufacture Discontinued)

All castings in the Type 950A Junctionbox Crossarms are Aluminum. Replacement parts of cast aluminum will be furnished unless cast iron is specified. Aluminum and cast iron parts are physically interchangeable.

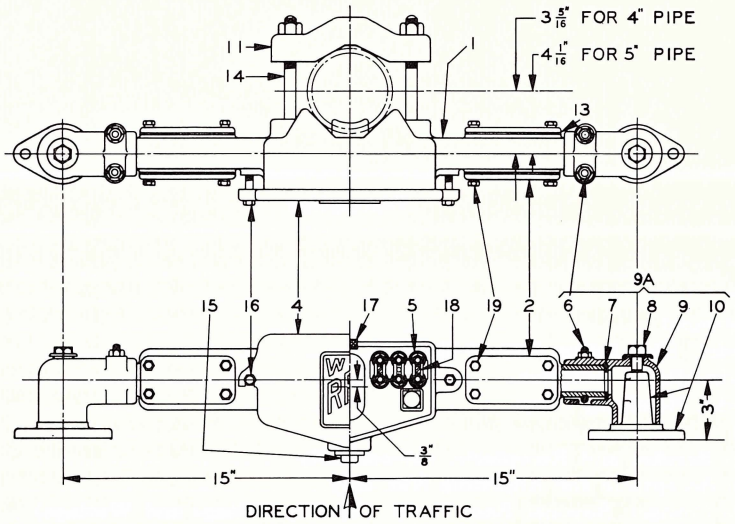

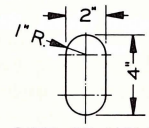

SIZE OF HOLE REQUIRED IN PIPE

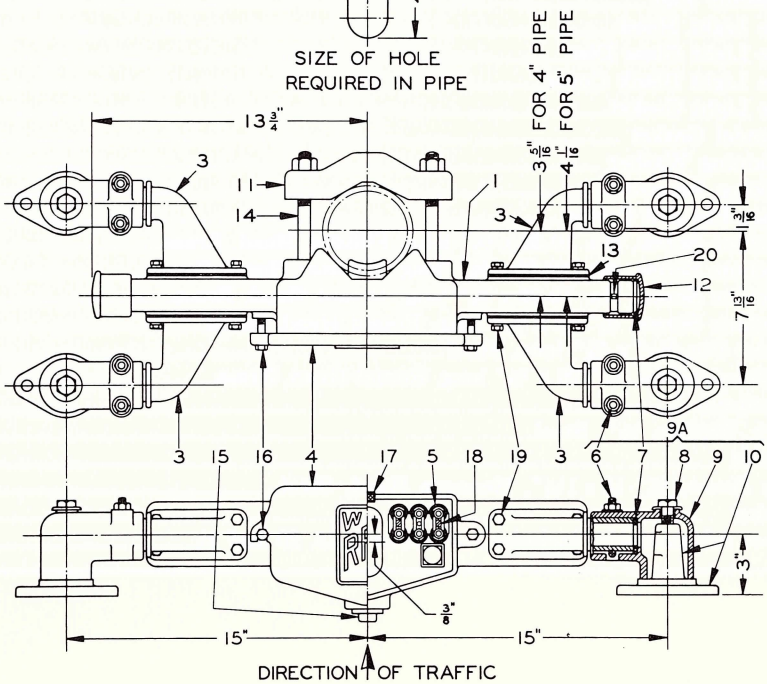

NOTE:
1 — For ordering references for replacement parts for these Junctionbox Crossarms see following page.

Junction Box Cross Arm For Mounting Type 950A-201 Crossing Signal Light Units

REPLACEMENT PARTS ONLY
(Manufacture Discontinued)

Ref. No.	Description	Piece No.
1	Junctionbox, casting only	950A-22
1a	Junctionbox, subassembly of references 1, 4, 5, 15, 17, and 18	950A-62
2	Cover Plate	950A-39
3	Bracket, 3½″ extension	950A-57
4	Cover, with packing	950A-21
5	Terminal Block, complete, 6 binding posts	2506-106
6	"U" Bolt, complete with nuts	950-31
7	Gasket, sponge rubber	950-28
8	Bolt, complete with cupped washer	950-33
9	Supporting Bracket, casting only	950A-30
9a	Supporting Bracket, sub-assembly of references 6 to 10 inc.	950A-63
10	Light Unit Support	950A-32
11	Adaptor Clamp	950A-34
12	End Cap, with set screw and gasket	950A-29A
13	Gasket, cork	950-27
14	Machine Bolt, with hexagon nut, ⅝″-11 x 6″ long, for mounting junctionbox crossarm on 4″ I.D. Pipe	
14a	Machine Bolt, with hexagon nut, ⅝″-11 x 7½″ long, for mounting junction-box crossarm on 5″ I.D. Pipe	
14b	Machine Bolt, with hexagon nut, ⅝″-11, curved, for mounting junctionbox crossarm on 6″ I.D. Pipe	3364-37
14c	Machine Bolt, with hexagon nut, ⅝″-11, curved, for mounting junctionbox crossarm on 8″ I.D. Pipe	3364-35
15	Pipe Plug, 1¼″	
16	Cap Screw, ⅜″-16 x 2″ long, Hexagon Head, Steel	
17	Torchwick Packing, ⅜″ diameter, 27″ long	
18	Machine Screw No. 10-32 x ⅝″ long, Fillister Head, Brass	
19	Cap Screw, ⅜″-16 x ⅞″ long, Hexagon Head. steel, with plain washer	
20	Set Screw, ¼″-20 x ½″ long, Square Head, Cup Point	

Suggested Designs for Concrete Foundations For Flashing Light Highway Crossing Signals

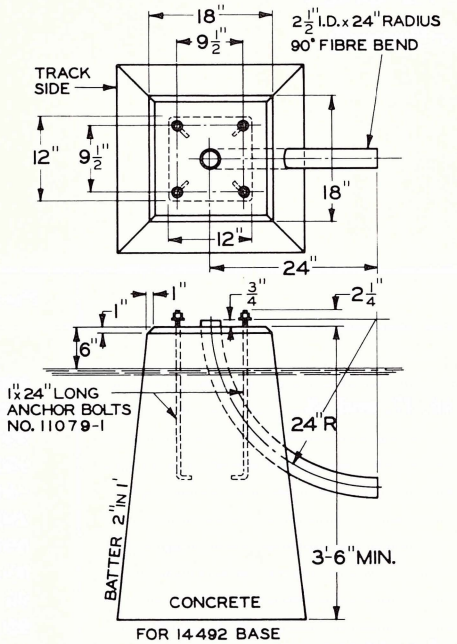

FOR 14492 BASE

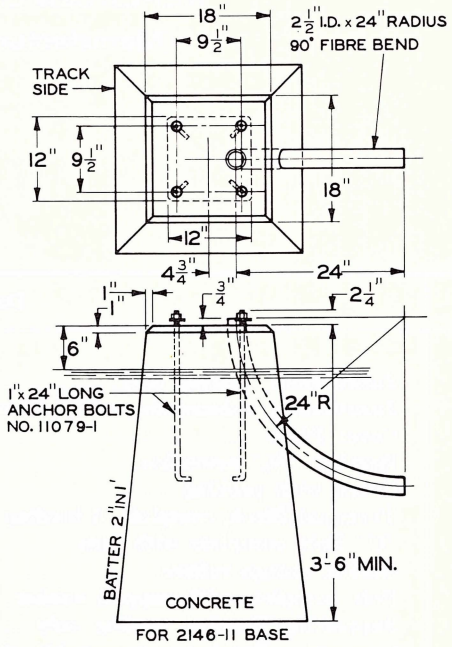

FOR 2146-11 BASE

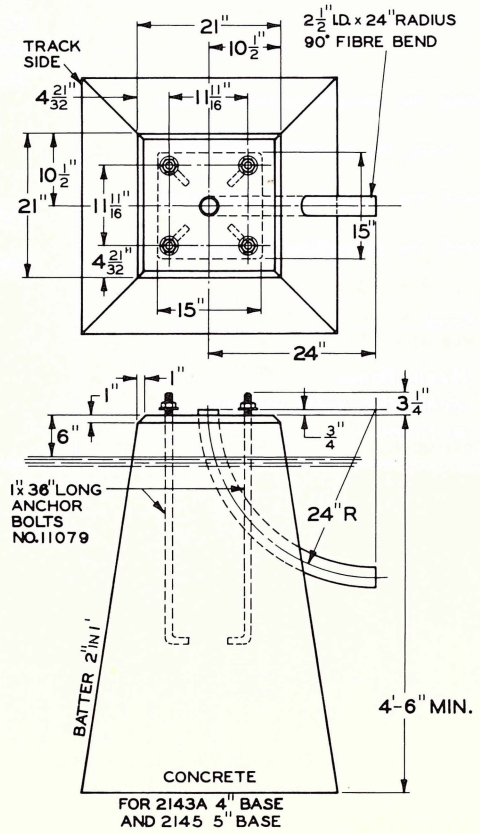

FOR 2143A 4" BASE AND 2145 5" BASE

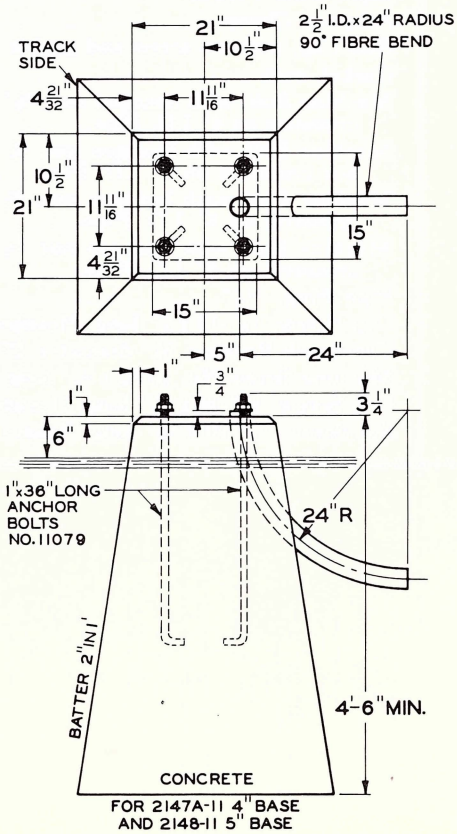

FOR 2147A-11 4" BASE AND 2148-11 5" BASE